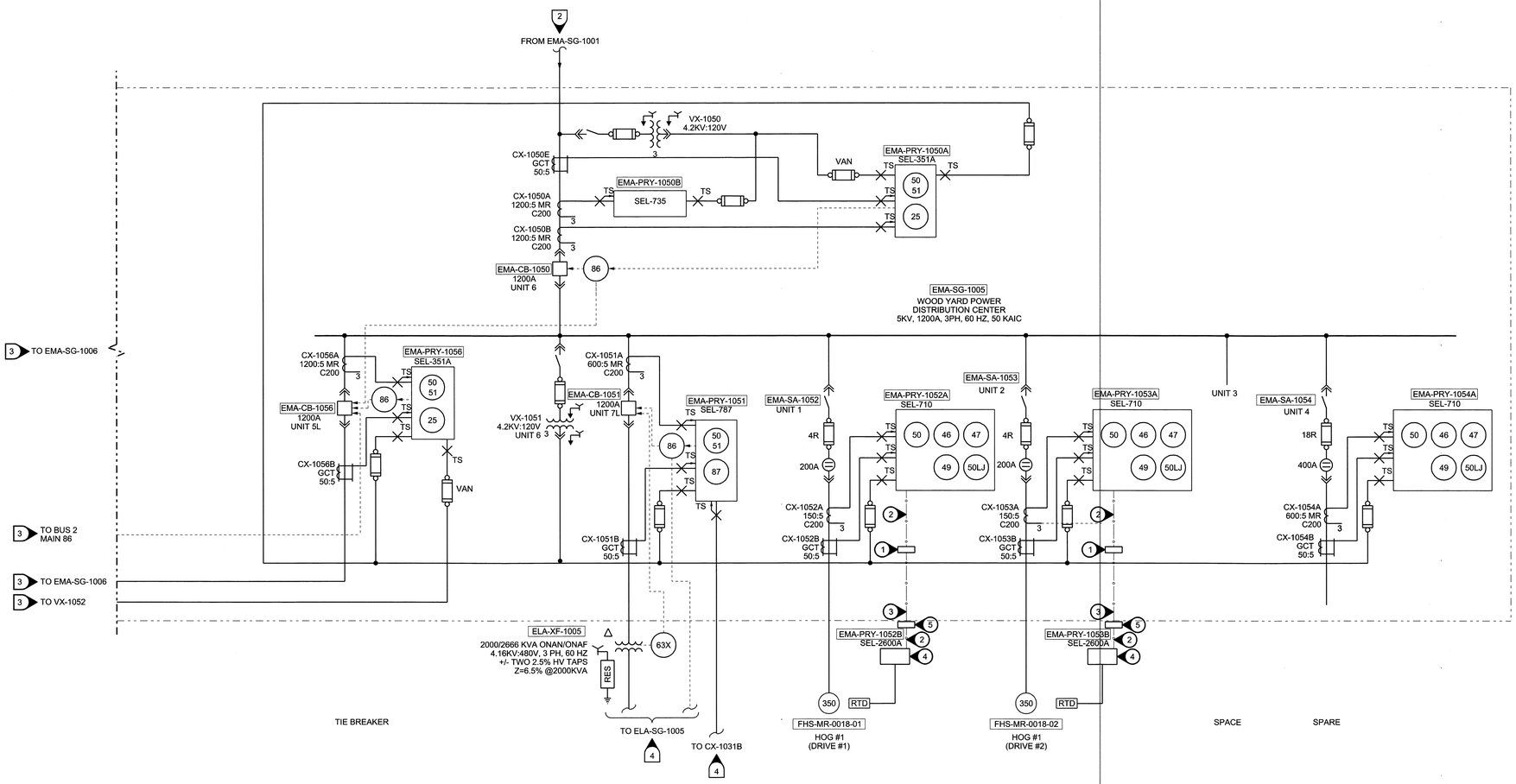

LEGEND

RTD	RESISTANCE TEMPERATURE DETECTOR
VAN	SINGLE PHASE VOLTAGE, PHASE A TO NEUTRAL
RES	RESISTANCE GROUNDING SYSTEM
- - - -	INSTRUMENT SIGNAL
—◦—	FIBER OPTIC CABLE
GCT	CURRENT TRANSFORMER GROUND SENSOR
50LJ	LOAD JAM

GENERAL NOTES

1. FIBER OPTIC CABLE TERMINATED AT FIBER PATCH PANEL LOCATED INSIDE OF SWITCHGEAR.
2. FIBER OPTIC PATCH CABLE FURNISHED AND INSTALLED BY MANUFACTURER. PATCH CABLE TO BE ROUTED BETWEEN DEVICES AS SHOWN. FIBER CABLE SHALL BE MULTIMODE, 2-FIBER, 62.5 MICRON WITH TYPE ST CONNECTORS ON BOTH ENDS.
3. FIBER OPTIC CABLE FURNISHED AND INSTALLED BY CONTRACTOR.
4. RTD MODULE FURNISHED BY MANUFACTURER AND INSTALLED BY CONTRACTOR. SELLER SHALL INSTALL THE RTD MODULE IN A NEMA 4X PANEL AND SHIP LOOSE INSIDE OF THE POWER DISTRIBUTION CENTER BUILDING AS SPECIFIED IN SECTION 262600.
5. FIBER OPTIC CABLE TERMINATED AT FIBER PATCH PANEL LOCATED INSIDE OF RTD MODULE NEMA 4X PANEL DESCRIBED IN NOTE 4.

REFERENCE DRAWINGS

1. ANNOTATIONS, ABBREVIATIONS AND ASSOCIATIONS ELECTRICAL SYMBOLS LIST AND GENERAL NOTES D014200-AAAE71001 SH01-SH02
2. MEDIUM VOLTAGE AC; 4160V SWITCHGEAR EMA-SG-1001 ONE-LINE DIAGRAM D014200-EMAE11001 SH01
3. MEDIUM VOLTAGE AC; 4160V SWITCHGEAR EMA-SG-1006 ONE-LINE DIAGRAM D014200-EMAE11006 SH01
4. LOW VOLTAGE AC POWER SYSTEM; 480V SWITCHGEAR ELA-SG-1005 ONE-LINE DIAGRAM D014200-ELAE11005 SH01-SH02
5. EMA-SG-1005/1006 MASTERCLAD SWITCHGEAR ONE-LINE DIAGRAM M014200-PDCE00007 SH01 RB AND SH02 RA
6. EMA-SG-1005 MEDIUM VOLTAGE MCC ONE-LINE M014200-PDCE00101 SH01 RA

NO.	REVISION	DATE	DRWN	DSND	CHKD	CHKD
1	REVISED DESIGN INFORMATION AND ADDED GENERAL NOTES AND REFERENCE DRAWINGS	092812	JBB	LM	MDP	EN
0	ISSUED FOR BID					

Gainesville Renewable Energy Center
An American Renewables Company

ZACHRY

ZACHRY ENGINEERING CORPORATION - 1515 ARAPAHOE STREET, TOWER 1, SUITE 900, DENVER, CO 80202-4256
FLORIDA BOARD OF PROFESSIONAL ENGINEERS CERTIFICATE OF AUTHORIZATION #26739
AMARILLO, TX CHARLOTTE, NC HOUSTON, TX MINNEAPOLIS, MN OMAHA, NE SAN ANTONIO, TX

ZACHRY ENGINEERING CORPORATION (ZACHRY) RETAINS ALL RIGHT, TITLE AND INTEREST, IN AND TO ALL INFORMATION INCLUDING, BUT NOT LIMITED TO, ALL INTELLECTUAL PROPERTY DEVELOPED BY, OR ON BEHALF OF, ZACHRY. NEITHER THIS DRAWING, NOR ANY INFORMATION CONTAINED HEREIN, SHALL BE REPRODUCED, USED OR RELIED UPON FOR THE PREPARATION OF DRAWINGS OR APPARATUS, OR FOR ANY OTHER PURPOSE, EXCEPT AS EXPRESSLY AUTHORIZED IN WRITING BY ZACHRY.

EXTENSIVE CHANGES
REVIEW THOROUGHLY

MICHAEL A. GENTRUP
LICENSE
STATE OF FLORIDA
No. P.E. 72557
PROFESSIONAL ENGINEER

GAINESVILLE RENEWABLE ENERGY CENTER
MEDIUM VOLTAGE AC
4160V SWITCHGEAR EMA-SG-1005
ONE-LINE DIAGRAM

DRAWN	DESIGNED	CHECKED	CHECKED
L. PETERSEN	L. MEYER	J. STILLWELL	K. MEREDITH

APPROVED DM: M. GENTRUP
APPROVED EN:
DRAWING NUMBER: D014200- EMAE11005
SHEET: 01
REV: 1

bejej 9/28/2012 10:39:40 AM P:\FAGEN\014200\techen\dgn\Elec\Other\EMAe11005sh01 - 4160V Switchgear EMA-SG-1005.DGN